1. SECURE MINI DUKT™ (SMD) Tube to SMD Tube
2. SMD Tube to SMD 90° INTERFACE Sleeve

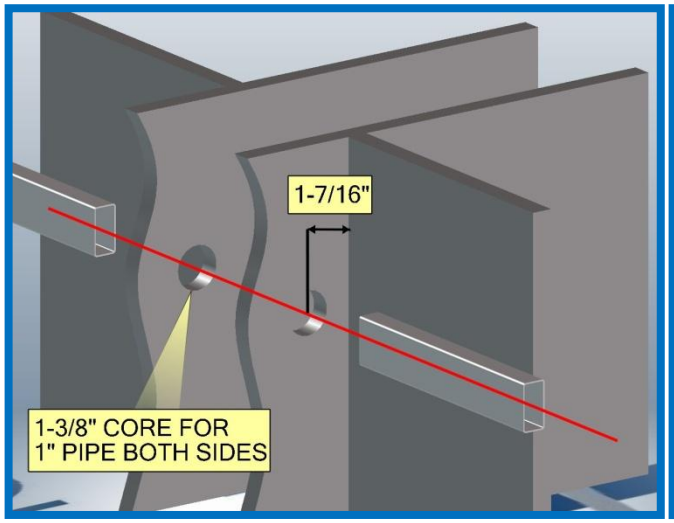

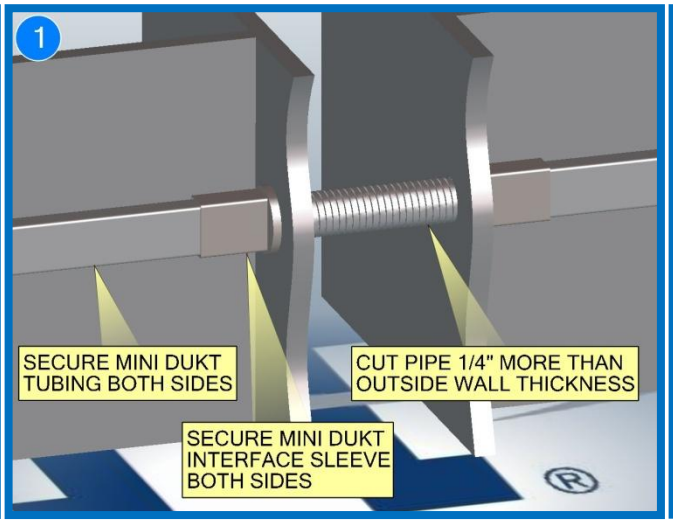

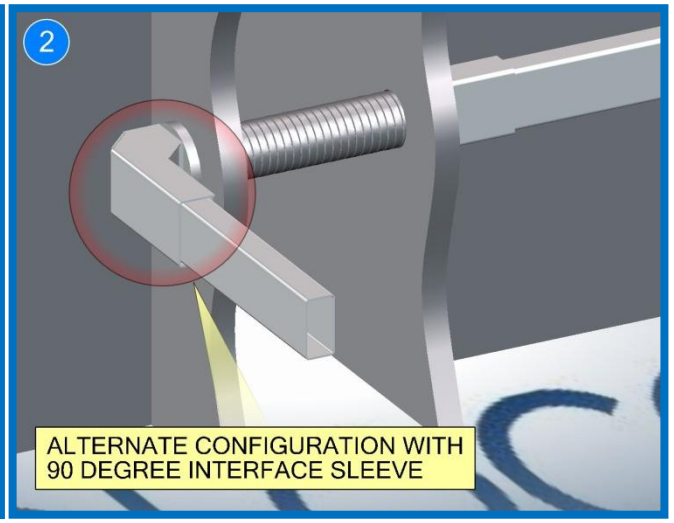

Copyright© 2012 Holocom, Inc. All rights reserved.